TECHNICAL DATA FOR REFERENCE ONLY!!

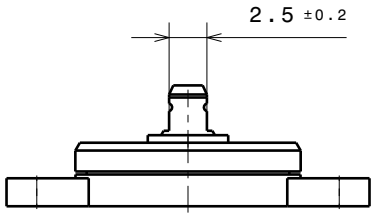

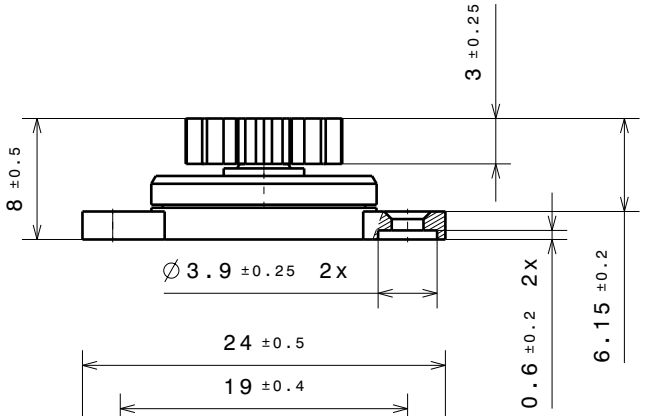

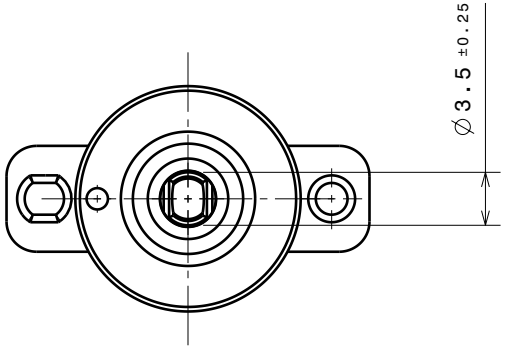

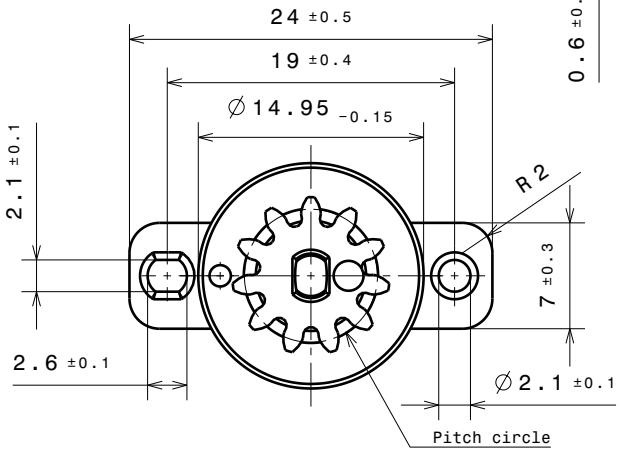

Torque at RT and 20 rpm.	Torque ID
2.20 ± 0.40 Ncm	M
1.50 ± 0.30 Ncm	F
1.10 ± 0.25 Ncm	L
0.95 ± 0.20 Ncm	Z
0.70 ± 0.17 Ncm	D
0.55 ± 0.15 Ncm	E
0.45 ± 0.15 Ncm	S
0.25 ± 0.10 Ncm	Y

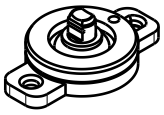

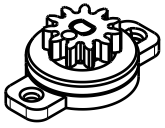

GEAR SPECIFICATION	
tooth engagement	20°
module	0.8
number of teeth	11

G SMALL STANDARD DAMPER

30252

with or without gear

PART NO. 30252-9-0X-0XX

All Rights Reserved

For further technical information, please contact your local representative by using the attached contact list.